4. Electrical Component Location

A: LOCATION

1. ENGINE

Control module

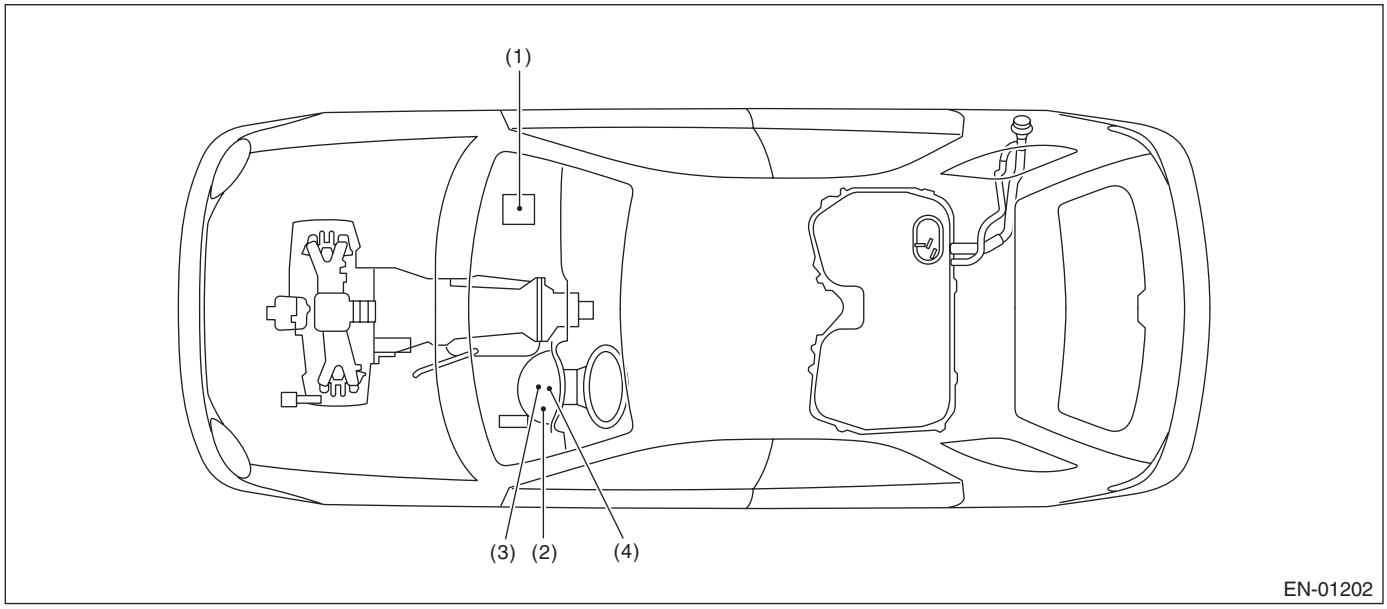

(1) Engine control module (ECM)
(2) Malfunction indicator light
(3) Data link connector
(4) Test mode connector

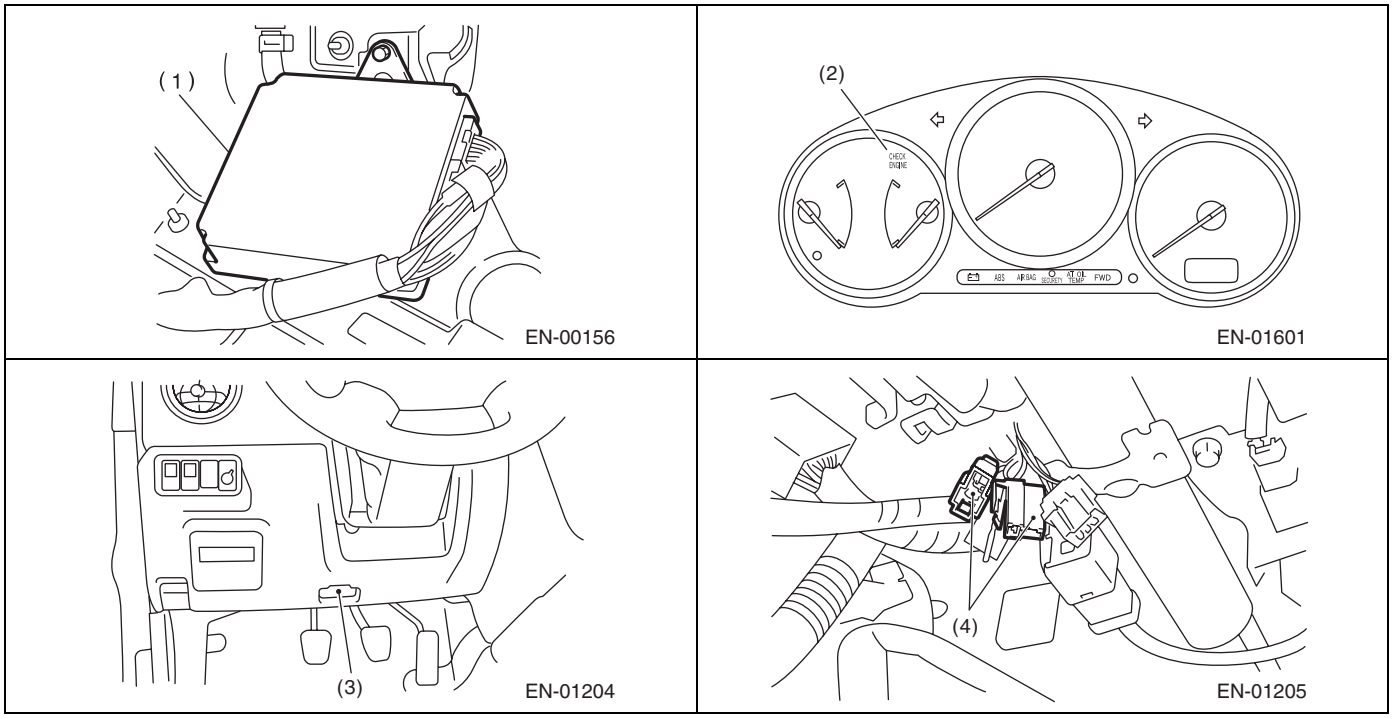

Sensor

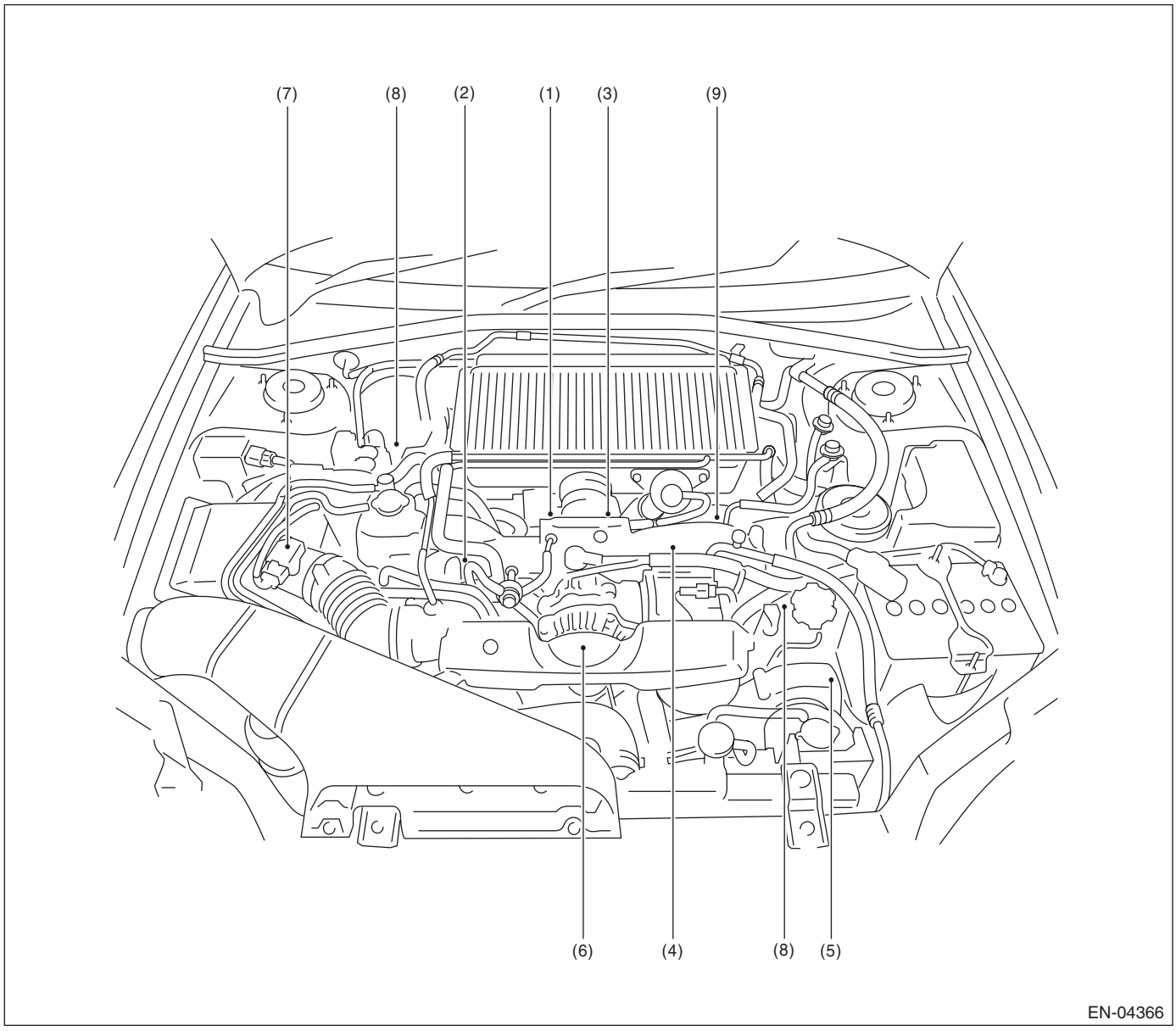

(1) Manifold absolute pressure sensor
(2) Engine coolant temperature sensor
(3) Electronic throttle control
(4) Knock sensor
(5) Camshaft position sensor
(6) Crankshaft position sensor
(7) Mass air flow and intake air temperature sensor
(8) Tumble generator valve position sensor
(9) Secondary air pressure sensor

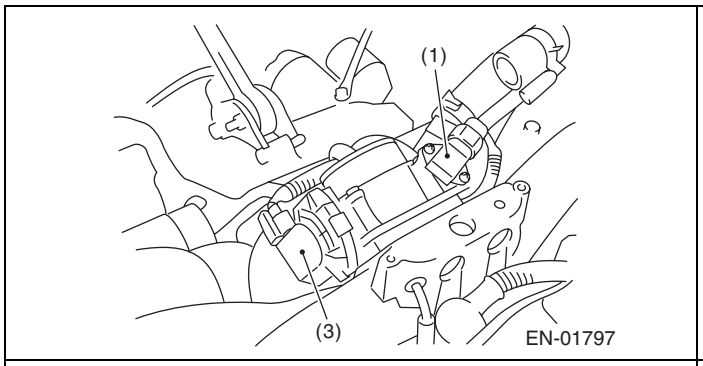
(1)
(3)
EN-01797

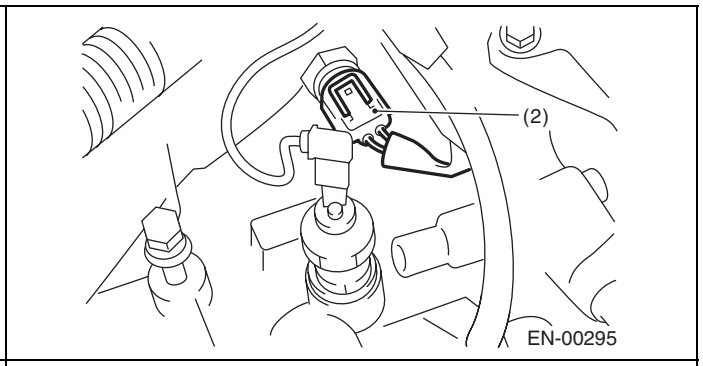
(2)
EN-00295

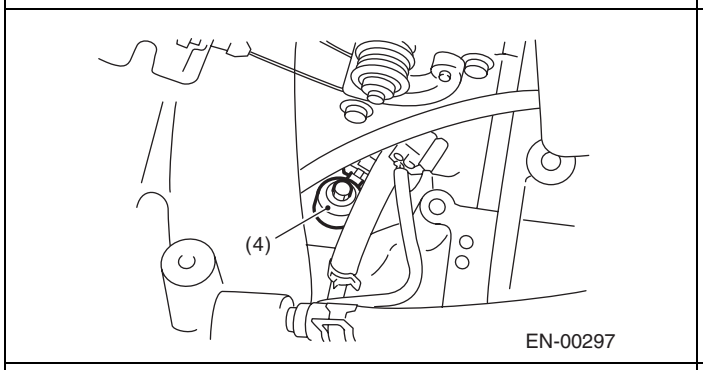
(4)
EN-00297

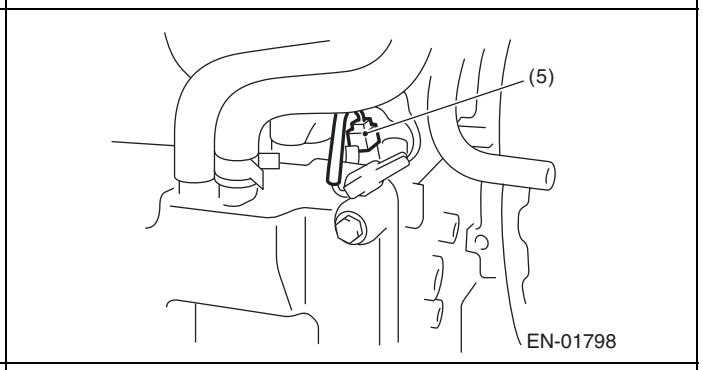
(5)
EN-01798

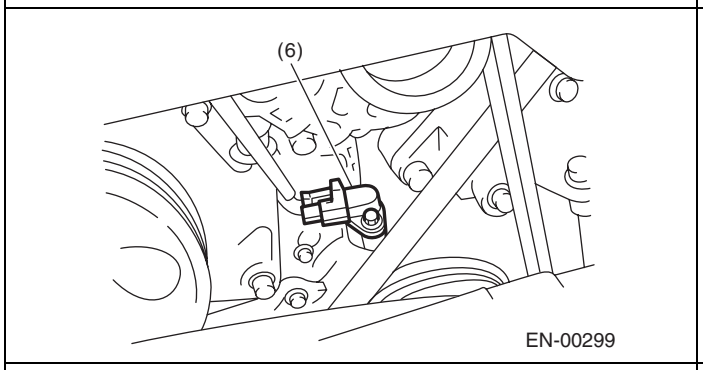
(6)
EN-00299

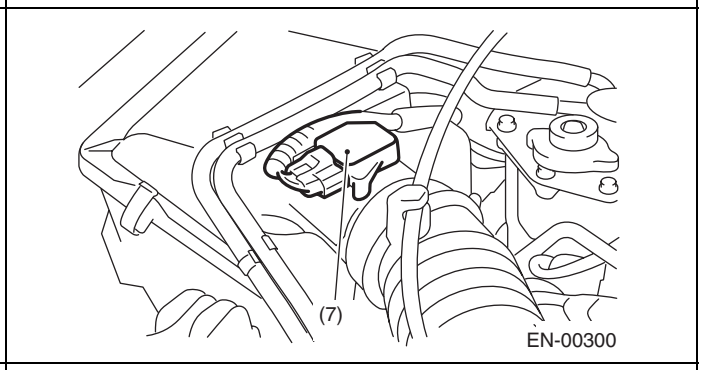
(7)
EN-00300

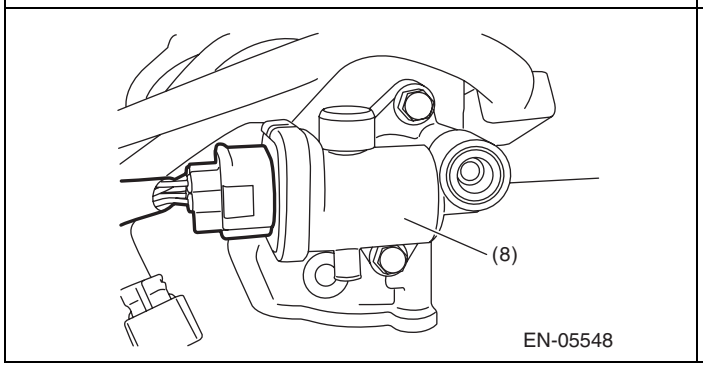
(8)
EN-05548

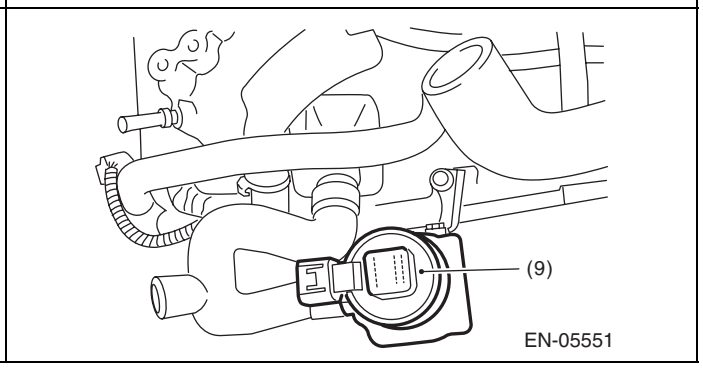
(9)
EN-05551

Electrical Component Location

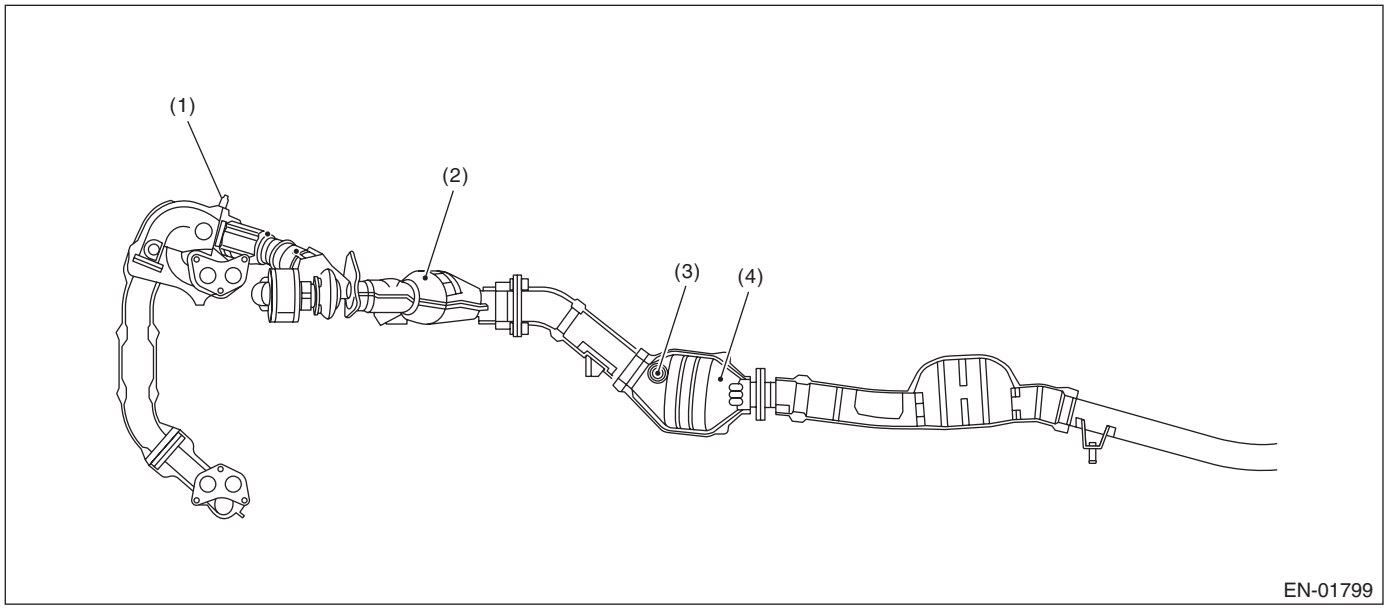

(1) Front oxygen (A/F) sensor
(2) Front catalytic converter
(3) Rear oxygen sensor
(4) Rear catalytic converter

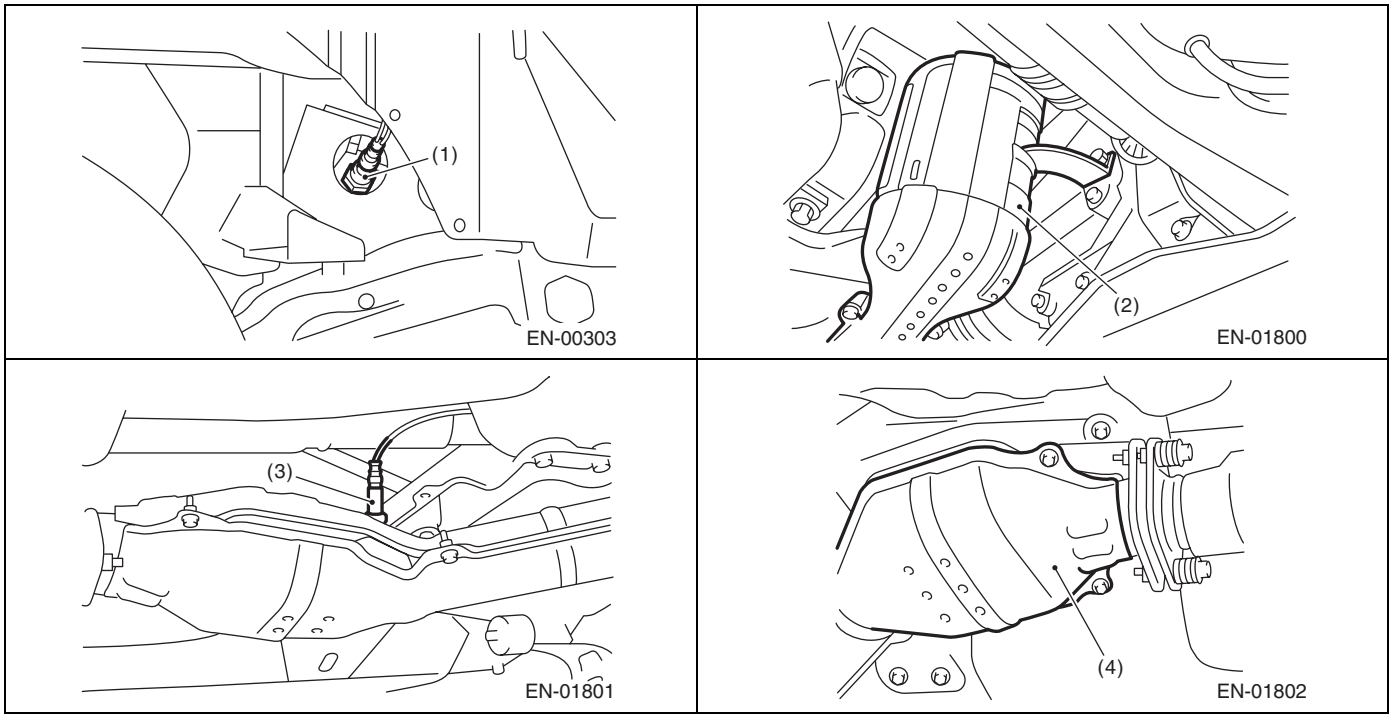

Electrical Component Location

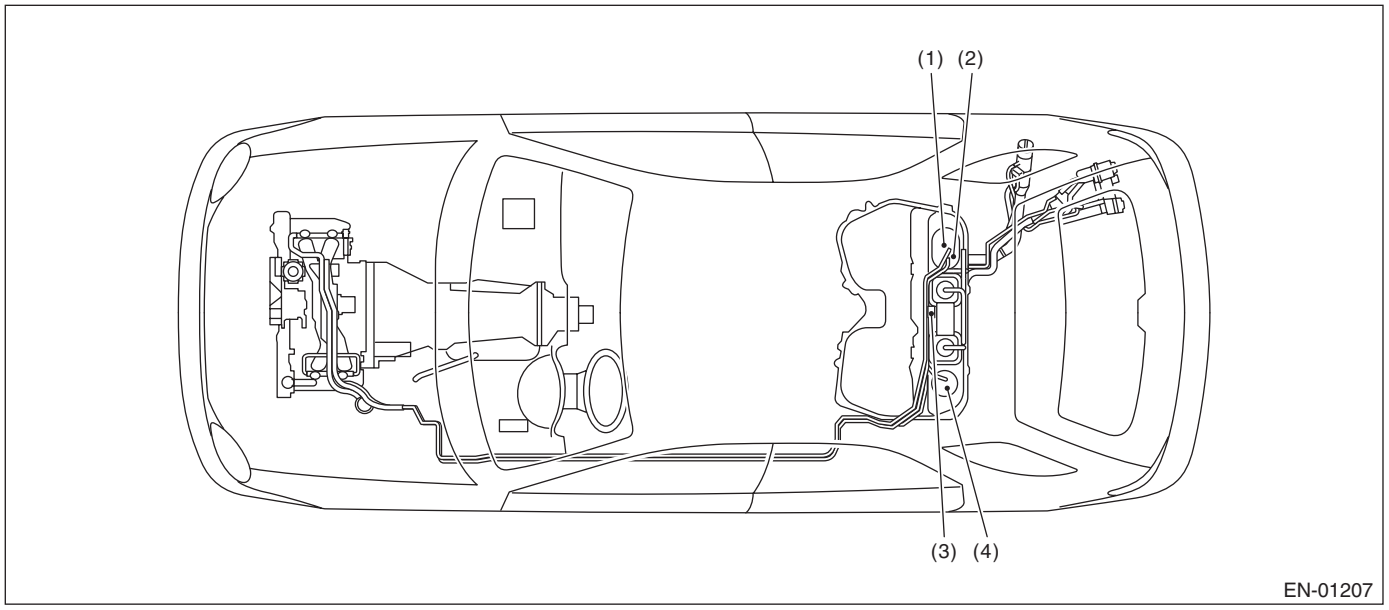

(1) Fuel level sensor
(2) Fuel temperature sensor
(3) Fuel tank pressure sensor
(4) Fuel sub level sensor

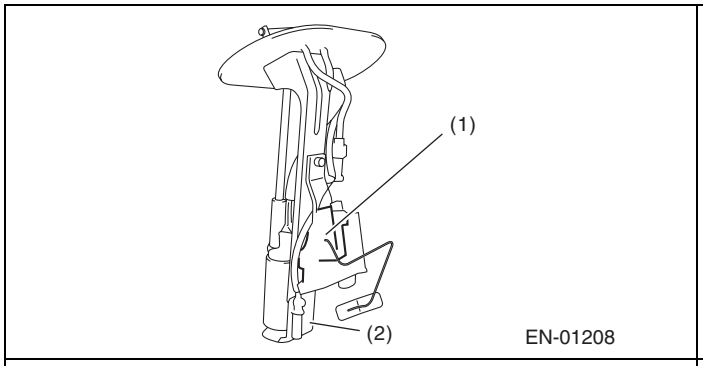

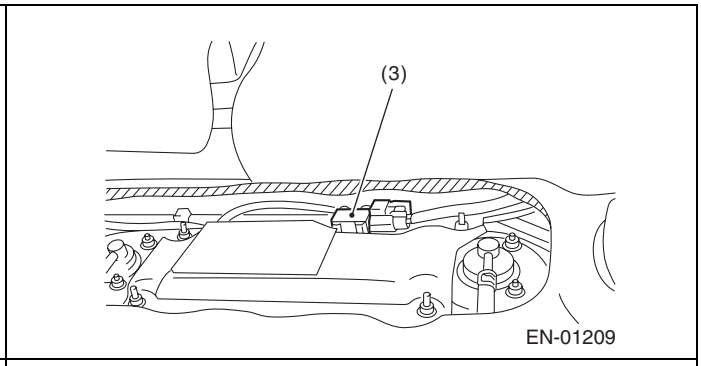

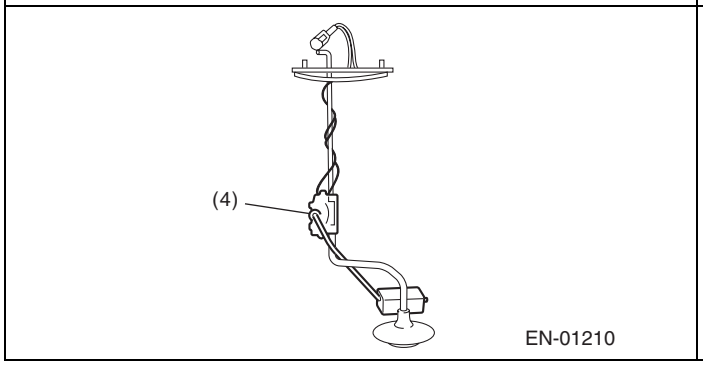

Solenoid valve, actuator, emission control system parts and ignition system parts

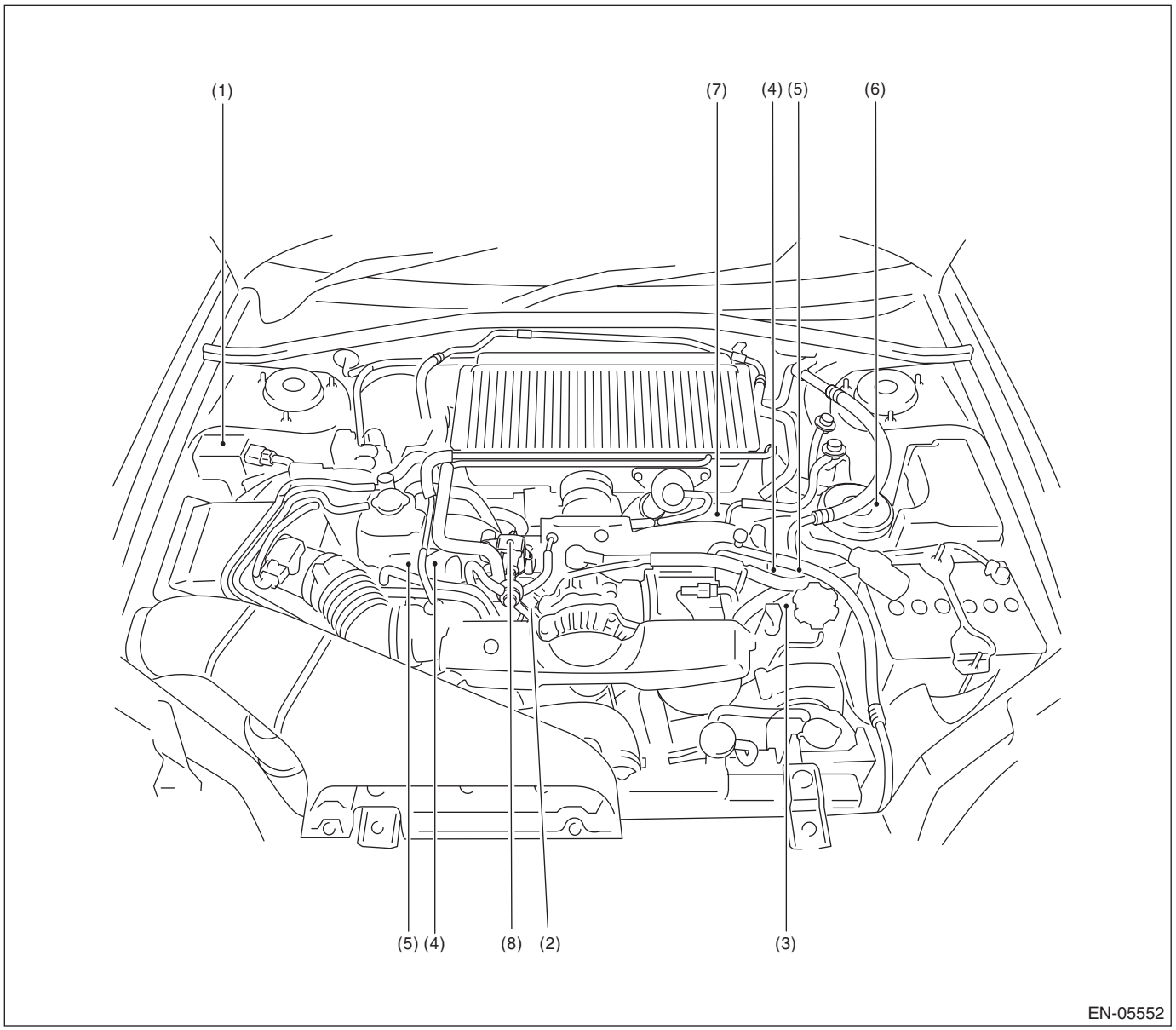

(1)	Wastegate control solenoid valve	(4)	Tumble generator valve actuator	(7)	Secondary air combination valve
(2)	Purge control solenoid valve 1	(5)	Oil flow control solenoid valve	(8)	Purge control solenoid valve 2
(3)	Ignition coil and ignitor ASSY	(6)	Secondary air pump		

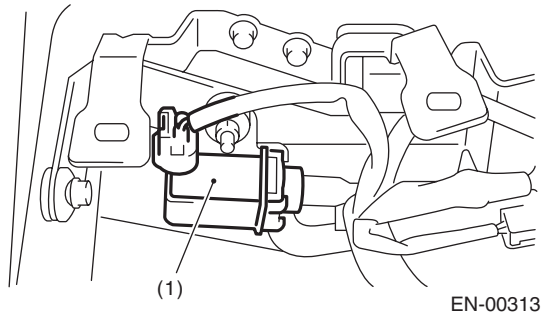

EN-00313

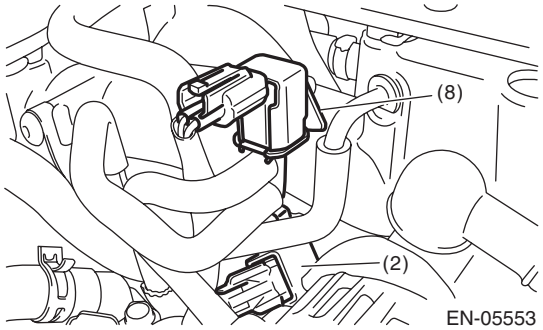

EN-05553

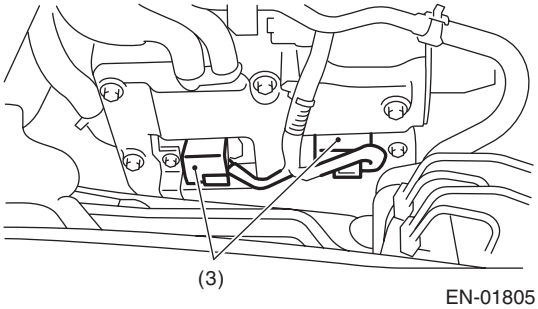

EN-01805

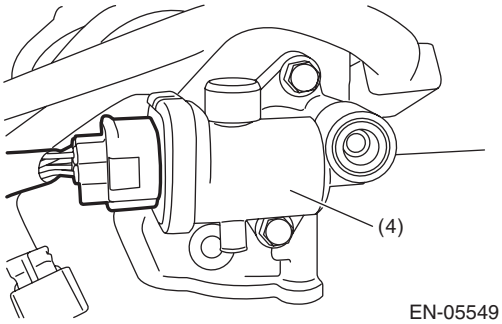

EN-05549

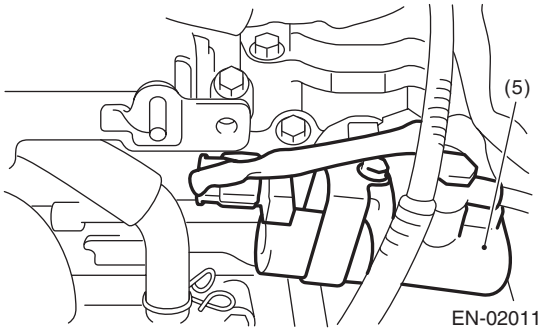

EN-02011

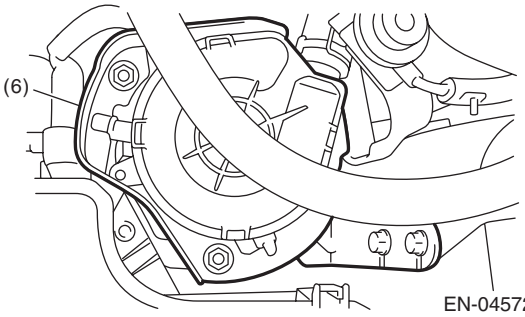

EN-04572

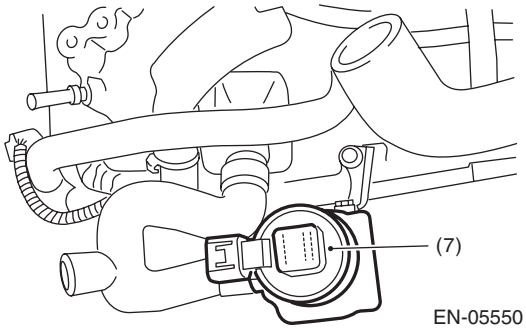

EN-05550

Electrical Component Location

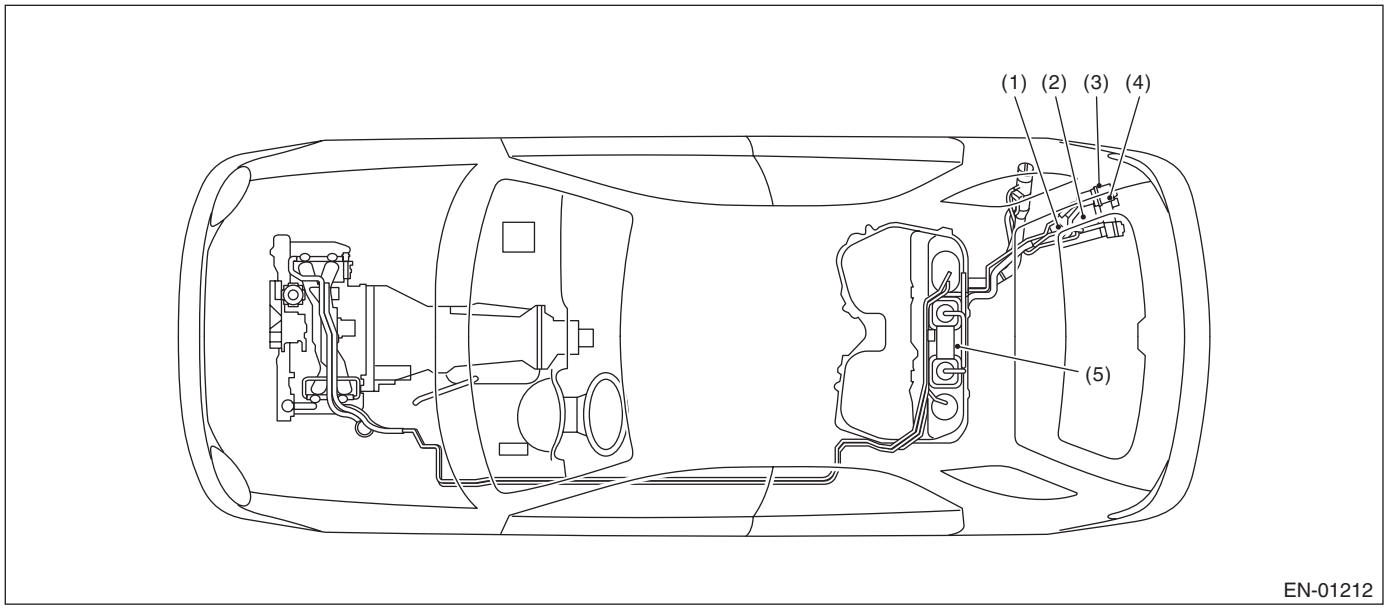

(1) Pressure control solenoid valve
(2) Canister
(3) Drain valve
(4) Drain filter
(5) Fuel tank sensor control valve

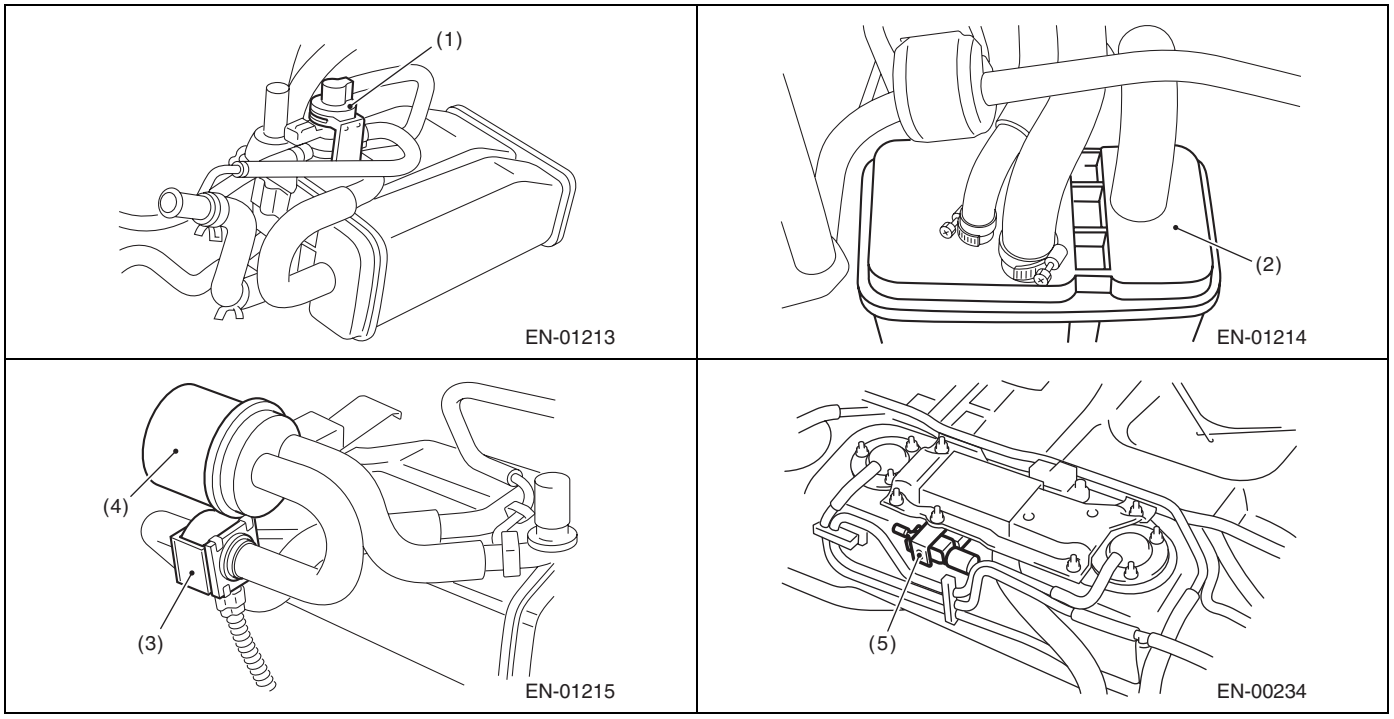

Electrical Component Location

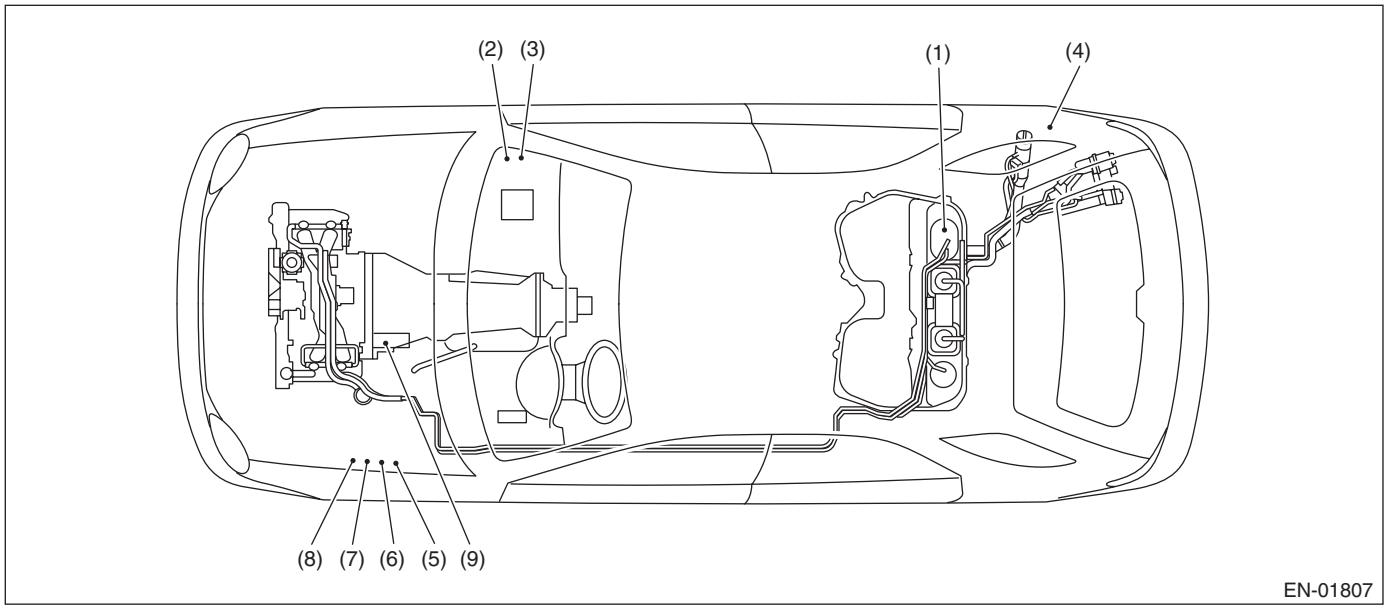

(1)	Fuel pump	(4)	Fuel pump controller	(7)	Radiator sub fan relay 1
(2)	Main relay	(5)	Radiator main fan relay 1	(8)	Radiator sub fan relay 2
(3)	Fuel pump relay	(6)	Radiator main fan relay 2	(9)	Starter

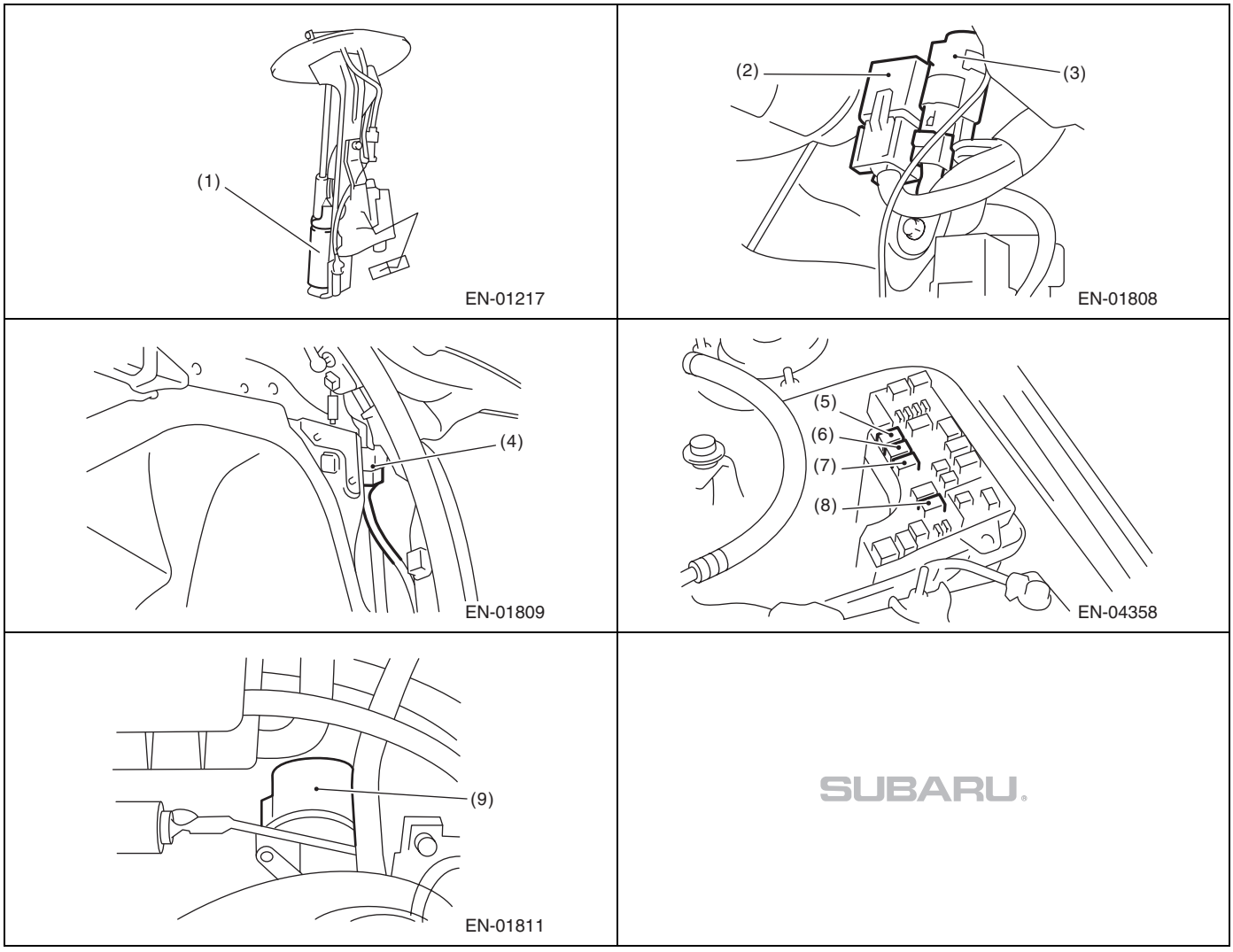

2. TRANSMISSION

Solenoid valve & switch

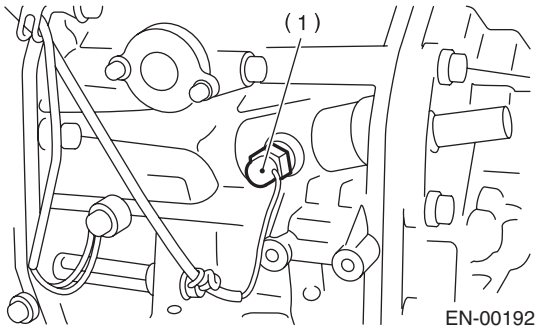

(1) Neutral position switch